EJOT®

Timber Construction

# T-FAST® Plus wood screw

Bites better. Splits less.

EJOT. Bringing it together.

# EJOT® Construction News

## Subscribe now and stay up to date with our newsletter

Stay up to date about our latest products and technologies with our regular newsletter. You receive free current information as well as processing tips and videos from the Building Fasteners sector.

**We are looking forward to your subscription.**

**Go to subscription form:**
www.ejot.de/bau/newsletter

**EJOT® Market Unit Construction Social Media**

EJOT® Market Unit Construction

ejot_construction

EJOT® Construction Division

ejotconstruction

# T-FAST® Plus in detail

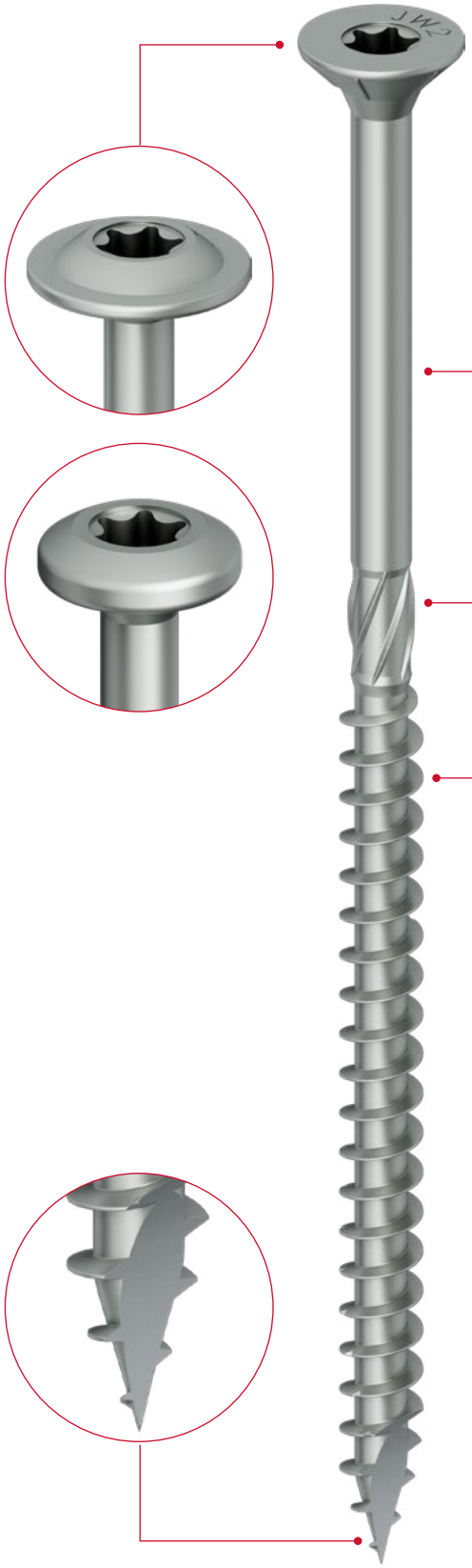

Countersunk head with hexalobular TX and milling ribs (STR)



Alternative: Wafer head with hexalobular TX (STS)

Non-threaded shaft



Additional head styles, diameters, lengths, and thread lengths with CE marking in accordance with ETA specifications available on request

End mill (from 50 mm shaft length)

Full and partial thread with adjusted thread pitch

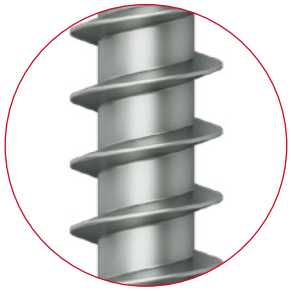

Small thread pitch (S)

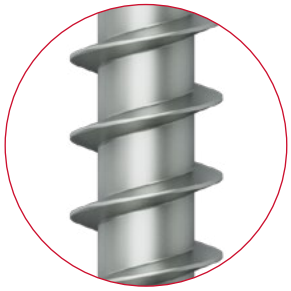

Medium thread pitch (M)



2-Plus point

# Timber construction

**Description**

General timber construction connections in the roof area, interior finishing and exterior areas. Fastening of wood, wood-based panels or sheets to wooden components made of solid wood, structural solid wood, glued laminated timber as well as panels made of solid wood, laminated veneer lumber or cross laminated timber in non-weathered and waethered areas.

**Application**

> Roof: truss rafter to purlin
> Beam layer: plate on ceiling joists
> Wall structure: planking on substructure
> Interior finishing: substructure fastening

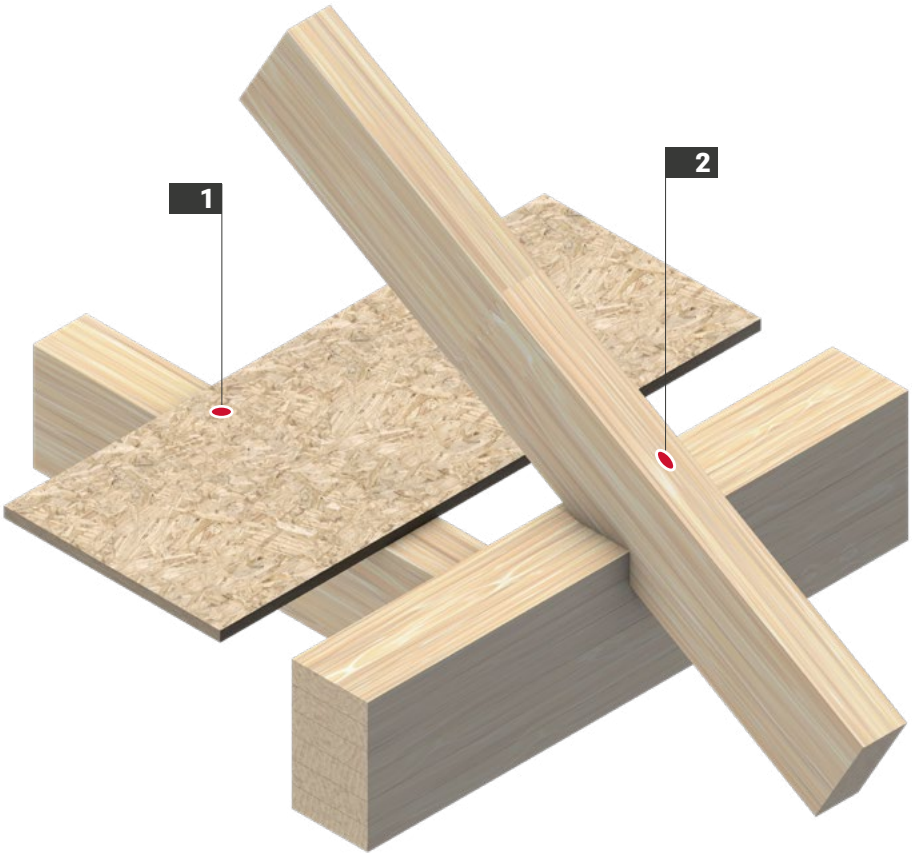


| No. | Application | Product | Page |
|---|---|---|---|
| 1 | 19 mm chipboard on ceiling joists | Wood screw JW2-2-Plus-STR-4.0X40/33-V S TX20 | 6 |

| No. | Application | Product | Page |
|---|---|---|---|
| 2 | 18 cm rafter on purlin | Wood screw JW2-2-Plus-STS-8.0X240/80-V M TX40 | 8 |

# Above-rafter insulation

**Description**

Thermal insulation reduces heat loss and is the best way to increase energy efficiency. In this case, the above-rafter insulation lies outside the supporting structure and forms a continuous envelope without thermal bridges. It is interesting for the renovation that the insulation thickness is not dictated by the rafter height and that it does not restrict the existing interior height.

**Application**

> Counter-batten
> Above-rafter insulation
> Load-bearing battens in areas with wind suction peaks

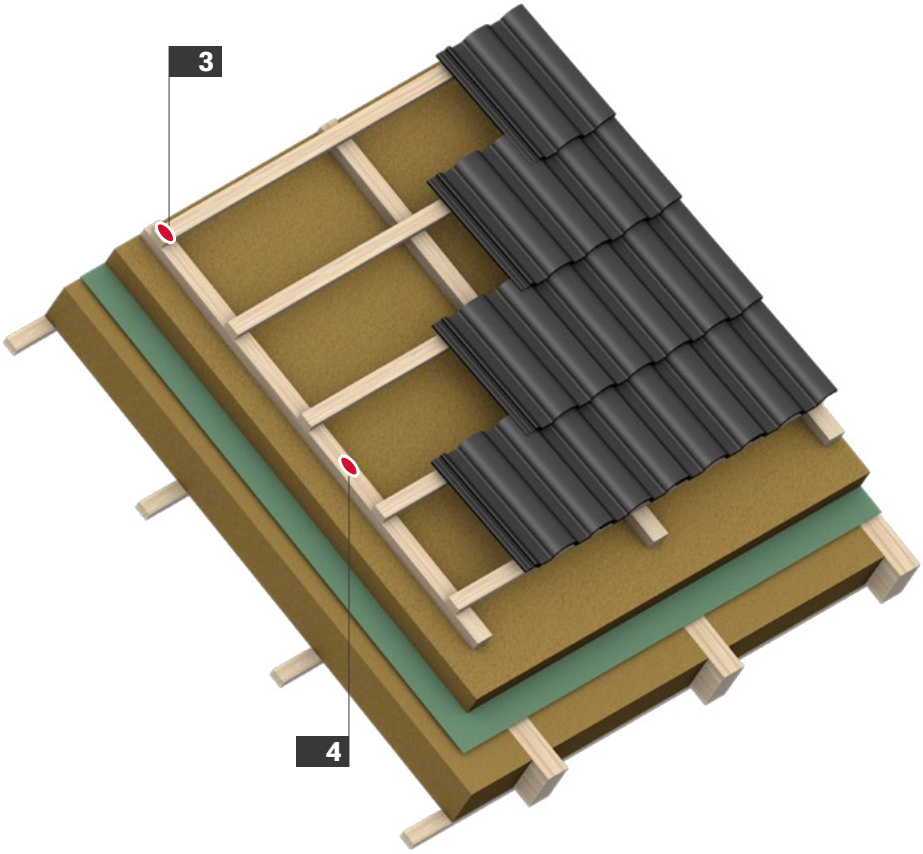


| No. | Application | | Product | Page |
|---|---|---|---|---|
| 3 | | 30 mm support lath on 40 mm counter lath | Wood screw JW2-2-Plus-STR-4.0x70/40-V S TX20 | 6 |

| No. | Application | | Product | Page |
|---|---|---|---|---|
| 4 | | 100 mm Above-rafter insulation fastening | Wood screw JW2-2-Plus-STS-8.0x200/80-V M TX40 | 8 |

# NEW T-FAST® Plus wood screw JW2 countersunk head

T-FAST

## Application range

- Fastening of non-pre-drilled or pre-drilled components made of wood, wood-based material and pre-drilled and pre-set steel components to non-pre-drilled or pre-drilled components made of solid wood, solid structural timber (KVH), glued-laminated timber (BSH), laminated veneer lumber (LVL)
- For non-weathered areas

## Characteristics

- Carbon steel with zinc-plated surface and dry lubricant
- Countersunk (STR) head with milling ribs on the underside makes it easier to countersink the head for surface-fixed installation
- The end mill at the transition to the non-threaded fastener shaft reduces the installation torque and simplifies the installation process (from 50 mm shaft length)
- Full and partial thread
- Optimised thread geometry for improved prevention of screw over-tightening with short screws and accelerated processing with long screws
- T-FAST® Plus point geometry for fast point biting and efficient reduction of wood splitting

## Applications

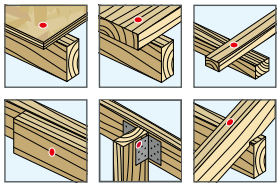

## Technical specifications

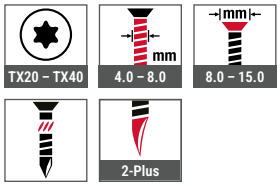


## Certifications

## Cross references

Cordless screwdriver ASCS QSW
Bit hexalobular TX

## Product online

| Order description | d [mm] | l [mm] | $l_g$ [mm] | $d_h$ [mm] | drive | PU [pieces] | Article number | EAN |
|---|---|---|---|---|---|---|---|---|
| **d 4.0 – full-threaded screw** | | | | | | | | |
| JW2-2-Plus-STR-4.0X25/18-V S TX20 | 4.0 | 25 | 18 | 8.0 | TX20 | 200 | 3820000373 | 4061245124117 |
| JW2-2-Plus-STR-4.0X30/23-V S TX20 | 4.0 | 30 | 23 | 8.0 | TX20 | 200 | 3820000374 | 4061245124124 |
| JW2-2-Plus-STR-4.0X35/28-V S TX20 | 4.0 | 35 | 28 | 8.0 | TX20 | 200 | 3820000375 | 4061245124131 |
| JW2-2-Plus-STR-4.0X40/33-V S TX20 | 4.0 | 40 | 33 | 8.0 | TX20 | 200 | 3820000376 | 4061245124148 |
| **d 4.0 – partial threaded screw** | | | | | | | | |
| JW2-2-Plus-STR-4.0X35/24-V S TX20 | 4.0 | 35 | 24 | 8.0 | TX20 | 200 | 3820000377 | 4061245124155 |
| JW2-2-Plus-STR-4.0X40/24-V S TX20 | 4.0 | 40 | 24 | 8.0 | TX20 | 200 | 3820000378 | 4061245124162 |
| JW2-2-Plus-STR-4.0X45/25-V S TX20 | 4.0 | 45 | 25 | 8.0 | TX20 | 200 | 3820000379 | 4061245124179 |
| JW2-2-Plus-STR-4.0X50/30-V S TX20 | 4.0 | 50 | 30 | 8.0 | TX20 | 200 | 3820000380 | 4061245124186 |
| JW2-2-Plus-STR-4.0X60/35-V S TX20 | 4.0 | 60 | 35 | 8.0 | TX20 | 200 | 3820000381 | 4061245124193 |
| JW2-2-Plus-STR-4.0X70/40-V S TX20 | 4.0 | 70 | 40 | 8.0 | TX20 | 200 | 3820000382 | 4061245124209 |
| **d 4.5 – full-threaded screw** | | | | | | | | |
| JW2-2-Plus-STR-4.5X25/18-V S TX20 | 4.5 | 25 | 18 | 9.0 | TX20 | 200 | 3820000383 | 4061245124216 |
| JW2-2-Plus-STR-4.5X30/23-V S TX20 | 4.5 | 30 | 23 | 9.0 | TX20 | 200 | 3820000384 | 4061245124223 |
| JW2-2-Plus-STR-4.5X35/28-V S TX20 | 4.5 | 35 | 28 | 9.0 | TX20 | 200 | 3820000385 | 4061245124230 |
| JW2-2-Plus-STR-4.5X40/33-V S TX20 | 4.5 | 40 | 33 | 9.0 | TX20 | 200 | 3820000386 | 4061245124247 |
| JW2-2-Plus-STR-4.5X45/38-V S TX20 | 4.5 | 45 | 38 | 9.0 | TX20 | 200 | 3820000387 | 4061245124254 |
| JW2-2-Plus-STR-4.5X50/43-V S TX20 | 4.5 | 50 | 43 | 9.0 | TX20 | 200 | 3820000388 | 4061245124261 |

| Order description | d [mm] | l [mm] | $l_g$ [mm] | $d_h$ [mm] | drive | PU [pieces] | Article number | EAN |
|---|---|---|---|---|---|---|---|---|
| **d 4.5 – partial threaded screw** | | | | | | | | |
| JW2-2-Plus-STR-4.5X40/24-V S TX20 | 4.5 | 40 | 24 | 9.0 | TX20 | 200 | 3820000389 | 4061245124278 |
| JW2-2-Plus-STR-4.5X45/25-V S TX20 | 4.5 | 45 | 25 | 9.0 | TX20 | 200 | 3820000390 | 4061245124285 |
| JW2-2-Plus-STR-4.5X50/30-V S TX20 | 4.5 | 50 | 30 | 9.0 | TX20 | 200 | 3820000391 | 4061245124292 |
| JW2-2-Plus-STR-4.5X60/35-V S TX20 | 4.5 | 60 | 35 | 9.0 | TX20 | 200 | 3820000392 | 4061245124308 |
| JW2-2-Plus-STR-4.5X70/40-V S TX20 | 4.5 | 70 | 40 | 9.0 | TX20 | 200 | 3820000393 | 4061245124315 |
| JW2-2-Plus-STR-4.5X80/40-V S TX20 | 4.5 | 80 | 40 | 9.0 | TX20 | 200 | 3820000394 | 4061245124322 |
| **d 5.0 – full-threaded screw** | | | | | | | | |
| JW2-2-Plus-STR-5.0X40/33-V S TX20 | 5.0 | 40 | 33 | 10.0 | TX20 | 200 | 3820000395 | 4061245124339 |
| JW2-2-Plus-STR-5.0X50/43-V S TX20 | 5.0 | 50 | 43 | 10.0 | TX20 | 200 | 3820000396 | 4061245124346 |
| JW2-2-Plus-STR-5.0X60/53-V S TX20 | 5.0 | 60 | 53 | 10.0 | TX20 | 200 | 3820000397 | 4061245124353 |
| JW2-2-Plus-STR-5.0X70/63-V S TX20 | 5.0 | 70 | 63 | 10.0 | TX20 | 200 | 3820000398 | 4061245124360 |
| **d 5.0 – partial threaded screw** | | | | | | | | |
| JW2-2-Plus-STR-5.0X50/30-V S TX20 | 5.0 | 50 | 30 | 10.0 | TX20 | 200 | 3820000399 | 4061245124377 |
| JW2-2-Plus-STR-5.0X60/35-V S TX20 | 5.0 | 60 | 35 | 10.0 | TX20 | 200 | 3820000400 | 4061245124384 |
| JW2-2-Plus-STR-5.0X70/40-V S TX20 | 5.0 | 70 | 40 | 10.0 | TX20 | 200 | 3820000401 | 4061245124391 |
| JW2-2-Plus-STR-5.0X80/40-V S TX20 | 5.0 | 80 | 40 | 10.0 | TX20 | 200 | 3820000402 | 4061245124407 |
| JW2-2-Plus-STR-5.0X90/45-V S TX20 | 5.0 | 90 | 45 | 10.0 | TX20 | 100 | 3820000403 | 4061245124414 |
| JW2-2-Plus-STR-5.0X100/60-V S TX20 | 5.0 | 100 | 60 | 10.0 | TX20 | 100 | 3820000404 | 4061245124421 |
| JW2-2-Plus-STR-5.0X120/70-V S TX20 | 5.0 | 120 | 70 | 10.0 | TX20 | 100 | 3820000405 | 4061245124438 |
| **d 6.0 – partial threaded screw** | | | | | | | | |
| JW2-2-Plus-STR-6.0X50/30-V S TX30 | 6.0 | 50 | 30 | 12.0 | TX30 | 200 | 3820000406 | 4061245124445 |
| JW2-2-Plus-STR-6.0X60/35-V S TX30 | 6.0 | 60 | 35 | 12.0 | TX30 | 200 | 3820000407 | 4061245124452 |
| JW2-2-Plus-STR-6.0X70/40-V S TX30 | 6.0 | 70 | 40 | 12.0 | TX30 | 200 | 3820000408 | 4061245124469 |
| JW2-2-Plus-STR-6.0X80/40-V S TX30 | 6.0 | 80 | 40 | 12.0 | TX30 | 200 | 3820000409 | 4061245124476 |
| JW2-2-Plus-STR-6.0X90/45-V S TX30 | 6.0 | 90 | 45 | 12.0 | TX30 | 100 | 3820000410 | 4061245124483 |
| JW2-2-Plus-STR-6.0X100/60-V S TX30 | 6.0 | 100 | 60 | 12.0 | TX30 | 100 | 3820000411 | 4061245124490 |
| JW2-2-Plus-STR-6.0x120/70-V M TX30 | 6.0 | 120 | 70 | 12.0 | TX30 | 100 | 3820000412 | 4061245124506 |
| JW2-2-Plus-STR-6.0x140/70-V M TX30 | 6.0 | 140 | 70 | 12.0 | TX30 | 100 | 3820000413 | 4061245124513 |
| JW2-2-Plus-STR-6.0x160/70-V M TX30 | 6.0 | 160 | 70 | 12.0 | TX30 | 100 | 3820000414 | 4061245124520 |
| JW2-2-Plus-STR-6.0x180/70-V M TX30 | 6.0 | 180 | 70 | 12.0 | TX30 | 100 | 3820000415 | 4061245124537 |
| JW2-2-Plus-STR-6.0x200/70-V M TX30 | 6.0 | 200 | 70 | 12.0 | TX30 | 100 | 3820000416 | 4061245124551 |
| JW2-2-Plus-STR-6.0x220/70-V M TX30 | 6.0 | 220 | 70 | 12.0 | TX30 | 100 | 3820000417 | 4061245124544 |
| JW2-2-Plus-STR-6.0x240/70-V M TX30 | 6.0 | 240 | 70 | 12.0 | TX30 | 100 | 3820000418 | 4061245124568 |
| JW2-2-Plus-STR-6.0x260/70-V M TX30 | 6.0 | 260 | 70 | 12.0 | TX30 | 100 | 3820000419 | 4061245124575 |
| **d 8.0 – partial threaded screw** | | | | | | | | |
| JW2-2-Plus-STR-8.0x120/80-V M TX40 | 8.0 | 120 | 80 | 15.0 | TX40 | 50 | 3820000420 | 4061245124582 |
| JW2-2-Plus-STR-8.0x140/80-V M TX40 | 8.0 | 140 | 80 | 15.0 | TX40 | 50 | 3820000421 | 4061245124599 |
| JW2-2-Plus-STR-8.0x160/80-V M TX40 | 8.0 | 160 | 80 | 15.0 | TX40 | 50 | 3820000422 | 4061245124605 |
| JW2-2-Plus-STR-8.0x180/80-V M TX40 | 8.0 | 180 | 80 | 15.0 | TX40 | 50 | 3820000423 | 4061245124612 |
| JW2-2-Plus-STR-8.0x200/80-V M TX40 | 8.0 | 200 | 80 | 15.0 | TX40 | 50 | 3820000424 | 4061245124629 |
| JW2-2-Plus-STR-8.0x220/80-V M TX40 | 8.0 | 220 | 80 | 15.0 | TX40 | 50 | 3820000425 | 4061245124636 |
| JW2-2-Plus-STR-8.0x240/80-V M TX40 | 8.0 | 240 | 80 | 15.0 | TX40 | 50 | 3820000426 | 4061245124643 |
| JW2-2-Plus-STR-8.0x260/80-V M TX40 | 8.0 | 260 | 80 | 15.0 | TX40 | 50 | 3820000427 | 4061245124650 |
| JW2-2-Plus-STR-8.0x280/80-V M TX40 | 8.0 | 280 | 80 | 15.0 | TX40 | 50 | 3820000428 | 4061245124667 |
| JW2-2-Plus-STR-8.0x300/80-V M TX40 | 8.0 | 300 | 80 | 15.0 | TX40 | 50 | 3820000429 | 4061245124674 |
| JW2-2-Plus-STR-8.0x320/80-V M TX40 | 8.0 | 320 | 80 | 15.0 | TX40 | 50 | 3820000430 | 4061245124681 |
| JW2-2-Plus-STR-8.0x340/80-V M TX40 | 8.0 | 340 | 80 | 15.0 | TX40 | 50 | 3820000431 | 4061245124698 |
| JW2-2-Plus-STR-8.0x360/80-V M TX40 | 8.0 | 360 | 80 | 15.0 | TX40 | 50 | 3820000432 | 4061245124704 |

# NEW T-FAST® Plus wood screw JW2 wafer head

## Application range

- Fastening of non-pre-drilled or pre-drilled components made of wood, wood-based material and pre-drilled and pre-set steel components to non-pre-drilled or pre-drilled components made of solid wood, solid structural timber (KVH), glued-laminated timber (BSH), solid wood panels, laminated veneer lumber (LVL), wood-based panels or cross-laminated timber
- For non-weathered areas
- Suitable for fastening over-rafter insulation systems
- Ideal solution for fixing rafters onto purlins

## Characteristics

- Carbon steel with zinc-plated surface and dry lubricant
- Wafer head (STS) for strong tightening during installation and increased holding forces after installation
- The end mill at the transition to the non-threaded fastener shaft reduces the installation torque and simplifies the installation process (from 50 mm shaft length)
- Full and partial thread
- Optimised thread geometry for improved prevention of screw over-tightening with short screws and accelerated processing with long screws
- T-FAST® Plus point geometry for fast point biting and efficient reduction of wood splitting enables fast processing

## Applications

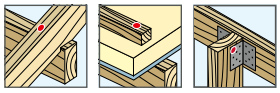

## Technical specifications

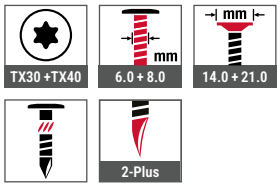


## Certifications

ETA-24/0816

## Cross references

Cordless screwdriver ASCS QSW
Bit hexalobular TX

## Product online

| Order description | d [mm] | l [mm] | $l_g$ [mm] | $d_h$ [mm] | drive | PU [pieces] | Article number | EAN |
|---|---|---|---|---|---|---|---|---|
| **d 6.0 – full-threaded screw** | | | | | | | | |
| JW2-2-Plus-STS-6.0x40/35-V S TX30 | 6.0 | 40 | 35 | 14.0 | TX30 | 100 | 3820000433 | 4061245124711 |
| JW2-2-Plus-STS-6.0x60/52-V S TX30 | 6.0 | 60 | 52 | 14.0 | TX30 | 100 | 3820000434 | 4061245124728 |
| JW2-2-Plus-STS-6.0x80/70-V S TX30 | 6.0 | 80 | 70 | 14.0 | TX30 | 100 | 3820000435 | 4061245124735 |
| **d 6.0 – partial threaded screw** | | | | | | | | |
| JW2-2-Plus-STS-6.0x100/80-V S TX30 | 6.0 | 100 | 80 | 14.0 | TX30 | 100 | 3820000436 | 4061245124742 |
| JW2-2-Plus-STS-6.0x120/70-V M TX30 | 6.0 | 120 | 70 | 14.0 | TX30 | 100 | 3820000437 | 4061245124759 |
| JW2-2-Plus-STS-6.0x140/70-V M TX30 | 6.0 | 140 | 70 | 14.0 | TX30 | 100 | 3820000438 | 4061245124766 |
| JW2-2-Plus-STS-6.0x160/70-V M TX30 | 6.0 | 160 | 70 | 14.0 | TX30 | 100 | 3820000439 | 4061245124773 |
| JW2-2-Plus-STS-6.0x180/70-V M TX30 | 6.0 | 180 | 70 | 14.0 | TX30 | 100 | 3820000233 | 4061245124780 |
| JW2-2-Plus-STS-6.0x200/70-V M TX30 | 6.0 | 200 | 70 | 14.0 | TX30 | 100 | 3820000441 | 4061245124797 |
| JW2-2-Plus-STS-6.0x220/70-V M TX30 | 6.0 | 220 | 70 | 14.0 | TX30 | 100 | 3820000442 | 4061245124803 |
| JW2-2-Plus-STS-6.0x240/70-V M TX30 | 6.0 | 240 | 70 | 14.0 | TX30 | 100 | 3820000443 | 4061245124810 |
| JW2-2-Plus-STS-6.0x260/70-V M TX30 | 6.0 | 260 | 70 | 14.0 | TX30 | 100 | 3820000444 | 4061245124827 |
| JW2-2-Plus-STS-6.0x280/70-V M TX30 | 6.0 | 280 | 70 | 14.0 | TX30 | 100 | 3820000445 | 4061245124834 |
| JW2-2-Plus-STS-6.0x300/70-V M TX30 | 6.0 | 300 | 70 | 14.0 | TX30 | 100 | 3820000246 | 4061245124841 |
| **d 8.0 – full-threaded screw** | | | | | | | | |
| JW2-2-Plus-STS-8.0x50/40-V M TX40 | 8.0 | 50 | 40 | 21.0 | TX40 | 50 | 3820000447 | 4061245124858 |
| JW2-2-Plus-STS-8.0x60/50-V M TX40 | 8.0 | 60 | 50 | 21.0 | TX40 | 50 | 3820000448 | 4061245124865 |
| JW2-2-Plus-STS-8.0x80/70-V M TX40 | 8.0 | 80 | 70 | 21.0 | TX40 | 50 | 3820000449 | 4061245124872 |

| Order description | d [mm] | l [mm] | $l_g$ [mm] | $d_h$ [mm] | drive | PU [pieces] | Article number | EAN |
|---|---|---|---|---|---|---|---|---|
| **d 8.0 – partial threaded screw** | | | | | | | | |
| JW2-2-Plus-STS-8.0x100/80-V M TX40 | 8.0 | 100 | 80 | 21.0 | TX40 | 50 | 3820000450 | 4061245124889 |
| JW2-2-Plus-STS-8.0x120/80-V M TX40 | 8.0 | 120 | 80 | 21.0 | TX40 | 50 | 3820000451 | 4061245124896 |
| JW2-2-Plus-STS-8.0x140/80-V M TX40 | 8.0 | 140 | 80 | 21.0 | TX40 | 50 | 3820000452 | 4061245124902 |
| JW2-2-Plus-STS-8.0x160/80-V M TX40 | 8.0 | 160 | 80 | 21.0 | TX40 | 50 | 3820000453 | 4061245124919 |
| JW2-2-Plus-STS-8.0x180/80-V M TX40 | 8.0 | 180 | 80 | 21.0 | TX40 | 50 | 3820000454 | 4061245124926 |
| JW2-2-Plus-STS-8.0x200/80-V M TX40 | 8.0 | 200 | 80 | 21.0 | TX40 | 50 | 3820000234 | 4061245124933 |
| JW2-2-Plus-STS-8.0x220/80-V M TX40 | 8.0 | 220 | 80 | 21.0 | TX40 | 50 | 3820000456 | 4061245124940 |
| JW2-2-Plus-STS-8.0x240/80-V M TX40 | 8.0 | 240 | 80 | 21.0 | TX40 | 50 | 3820000457 | 4061245124957 |
| JW2-2-Plus-STS-8.0x260/80-V M TX40 | 8.0 | 260 | 80 | 21.0 | TX40 | 50 | 3820000458 | 4061245124964 |
| JW2-2-Plus-STS-8.0x280/80-V M TX40 | 8.0 | 280 | 80 | 21.0 | TX40 | 50 | 3820000459 | 4061245124971 |
| JW2-2-Plus-STS-8.0x300/80-V M TX40 | 8.0 | 300 | 80 | 21.0 | TX40 | 50 | 3820000460 | 4061245124988 |
| JW2-2-Plus-STS-8.0x320/80-V M TX40 | 8.0 | 320 | 80 | 21.0 | TX40 | 50 | 3820000461 | 4061245124995 |
| JW2-2-Plus-STS-8.0x340/80-V M TX40 | 8.0 | 340 | 80 | 21.0 | TX40 | 50 | 3820000462 | 4061245125008 |
| JW2-2-Plus-STS-8.0x360/80-V M TX40 | 8.0 | 360 | 80 | 21.0 | TX40 | 50 | 3820000488 | 4061245125015 |
| JW2-2-Plus-STS-8.0x380/80-V M TX40 | 8.0 | 380 | 80 | 21.0 | TX40 | 50 | 3820000464 | 4061245125022 |
| JW2-2-Plus-STS-8.0x400/80-V M TX40 | 8.0 | 400 | 80 | 21.0 | TX40 | 50 | 3820000465 | 4061245125039 |

# NEW T-FAST® Plus wood screw JW4 countersunk head

T-FAST

## Application range

- Fastening of non-pre-drilled or pre-drilled components made of wood, wood-based material and pre-drilled and pre-set steel components to non-pre-drilled or pre-drilled components made of solid wood, solid structural timber (KVH), glued-laminated timber (BSH), solid wood panels, laminated veneer lumber (LVL), wood-based panels or cross-laminated timber
- For weathered areas
- Suitable for universal application

## Characteristics

- Stainless steel CRC II or stainless steel A2 with dry lubricant
- Countersunk (STR) head with milling ribs on the underside makes it easier to countersink the head for surface-fixed installation
- The end mill at the transition to the non-threaded fastener shaft reduces the installation torque and simplifies the installation process (from 50 mm shaft length)
- Partial thread for tightening the components to be fastened
- Optimised thread geometry for improved prevention of screw over-tightening
- T-FAST® Plus point geometry facilitates the screwing-in process through quick point biting, low screwing-in torque and efficiently reduced wood splitting

## Applications

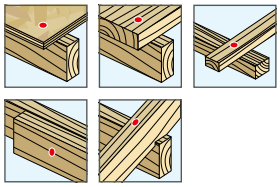

## Technical specifications

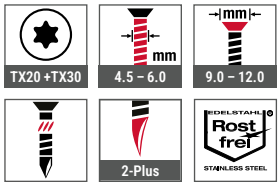


## Certifications

## Cross references

Cordless screwdriver ASCS QSW
Bit hexalobular TX

## Product online

| Order description | d [mm] | l [mm] | $l_g$ [mm] | $d_h$ [mm] | drive | PU [pieces] | Article number | EAN |
|---|---|---|---|---|---|---|---|---|
| **d 4.5 – partial threaded screw** | | | | | | | | |
| JW4-2-Plus-STR-4.5X50/30 S TX20 | 4.5 | 50 | 30 | 9.0 | TX20 | 200 | 3820000466 | 4061245123738 |
| JW4-2-Plus-STR-4.5X60/35 S TX20 | 4.5 | 60 | 35 | 9.0 | TX20 | 200 | 3820000467 | 4061245123745 |
| JW4-2-Plus-STR-4.5X70/40 S TX20 | 4.5 | 70 | 40 | 9.0 | TX20 | 200 | 3820000468 | 4061245123752 |
| JW4-2-Plus-STR-4.5X80/40 S TX20 | 4.5 | 80 | 40 | 9.0 | TX20 | 200 | 3820000469 | 4061245123769 |
| **d 5.0 – partial threaded screw** | | | | | | | | |
| JW4-2-Plus-STR-5.0X50/30 S TX20 | 5.0 | 50 | 30 | 10.0 | TX20 | 200 | 3820000470 | 4061245123776 |
| JW4-2-Plus-STR-5.0X60/35 S TX20 | 5.0 | 60 | 35 | 10.0 | TX20 | 200 | 3820000471 | 4061245123783 |
| JW4-2-Plus-STR-5.0X70/40 S TX20 | 5.0 | 70 | 40 | 10.0 | TX20 | 200 | 3820000472 | 4061245123790 |
| JW4-2-Plus-STR-5.0X80/40 S TX20 | 5.0 | 80 | 40 | 10.0 | TX20 | 200 | 3820000473 | 4061245123806 |
| JW4-2-Plus-STR-5.0X90/45 S TX20 | 5.0 | 90 | 45 | 10.0 | TX20 | 100 | 3820000474 | 4061245123813 |
| JW4-2-Plus-STR-5.0X100/60 S TX20 | 5.0 | 100 | 60 | 10.0 | TX20 | 100 | 3820000475 | 4061245123820 |
| JW4-2-Plus-STR-5.0X120/70 S TX20 | 5.0 | 120 | 70 | 10.0 | TX20 | 100 | 3820000476 | 4061245123837 |
| **d 6.0 – partial threaded screw** | | | | | | | | |
| JW4-2-Plus-STR-6.0X50/30 S TX30 | 6.0 | 50 | 30 | 12.0 | TX30 | 200 | 3820000477 | 4061245123844 |
| JW4-2-Plus-STR-6.0X60/35 S TX30 | 6.0 | 60 | 35 | 12.0 | TX30 | 200 | 3820000478 | 4061245123851 |
| JW4-2-Plus-STR-6.0X70/40 S TX30 | 6.0 | 70 | 40 | 12.0 | TX30 | 200 | 3820000479 | 4061245123868 |
| JW4-2-Plus-STR-6.0X80/40 S TX30 | 6.0 | 80 | 40 | 12.0 | TX30 | 200 | 3820000480 | 4061245123875 |
| JW4-2-Plus-STR-6.0X90/45 S TX30 | 6.0 | 90 | 45 | 12.0 | TX30 | 100 | 3820000481 | 4061245123882 |
| JW4-2-Plus-STR-6.0X100/60 S TX30 | 6.0 | 100 | 60 | 12.0 | TX30 | 100 | 3820000482 | 4061245123899 |

# NEW T-FAST® Plus wood screw JW4 wafer head

## Application range

- Fastening of non-pre-drilled or pre-drilled components made of wood, wood-based material and pre-drilled and pre-set steel components to non-pre-drilled or pre-drilled components made of solid wood, solid structural timber (KVH), glued-laminated timber (BSH), solid wood panels, laminated veneer lumber (LVL), wood-based panels or cross-laminated timber
- For weathered areas
- Suitable for universal application

## Characteristics

- Stainless steel CRC II or stainless steel A2 with dry lubricant
- Wafer head (STS) for strong tightening during installation and increased holding forces after installation
- Full and partial thread
- Optimised thread geometry for improved prevention of screw over-tightening with short screws and accelerated processing with long screws
- T-FAST® Plus point geometry facilitates the screwing-in process through quick point biting, low screwing-in torque and efficiently reduced wood splitting

## Applications

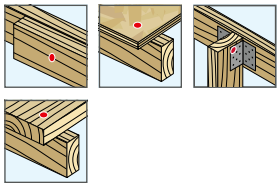

## Technical specifications

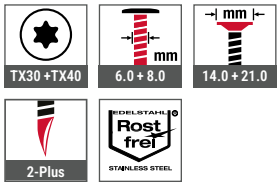


## Certifications

## Product online

**Cross references**

Cordless screwdriver ASCS QSW
Bit hexalobular TX

| Order description | d [mm] | l [mm] | $l_g$ [mm] | $d_h$ [mm] | drive | PU [pieces] | Article number | EAN |
|---|---|---|---|---|---|---|---|---|
| **d 6.0 – full-threaded screw** | | | | | | | | |
| JW4-2-Plus-STS-6.0x40/35 S TX30 | 6.0 | 40 | 35 | 14.0 | TX30 | 100 | 3820000483 | 4061245123905 |
| JW4-2-Plus-STS-6.0x60/52 S TX30 | 6.0 | 60 | 52 | 14.0 | TX30 | 100 | 3820000484 | 4061245123912 |
| JW4-2-Plus-STS-6.0x80/70 S TX30 | 6.0 | 80 | 70 | 14.0 | TX30 | 100 | 3820000485 | 4061245123929 |
| **d 6.0 – partial threaded screw** | | | | | | | | |
| JW4-2-Plus-STS-6.0x100/80 S TX30 | 6.0 | 100 | 80 | 14.0 | TX30 | 100 | 3820000486 | 4061245123936 |
| **d 8.0 – full-threaded screw** | | | | | | | | |
| JW4-2-Plus-STS-8.0x60/50 M TX40 | 8.0 | 60 | 50 | 21.0 | TX40 | 50 | 3820000487 | 4061245123943 |
| JW4-2-Plus-STS-8.0x80/70 M TX40 | 8.0 | 70 | 70 | 21.0 | TX40 | 50 | 3820000440 | 4061245123950 |
| **d 8.0 – partial threaded screw** | | | | | | | | |
| JW4-2-Plus-STS-8.0x100/80 M TX40 | 8.0 | 100 | 80 | 21.0 | TX40 | 50 | 3820000446 | 4061245123967 |
| JW4-2-Plus-STS-8.0x120/80 M TX40 | 8.0 | 120 | 80 | 21.0 | TX40 | 50 | 3820000455 | 4061245123974 |

**EJOT SE & Co. KG**
**Market Unit Construction**
In der Stockwiese 35
57334 Bad Laasphe · Germany
T +49 2752 908-0
F +49 2752 908-731
construction@ejot.com
www.ejot.com/construction

822-en-global-2026.10.27